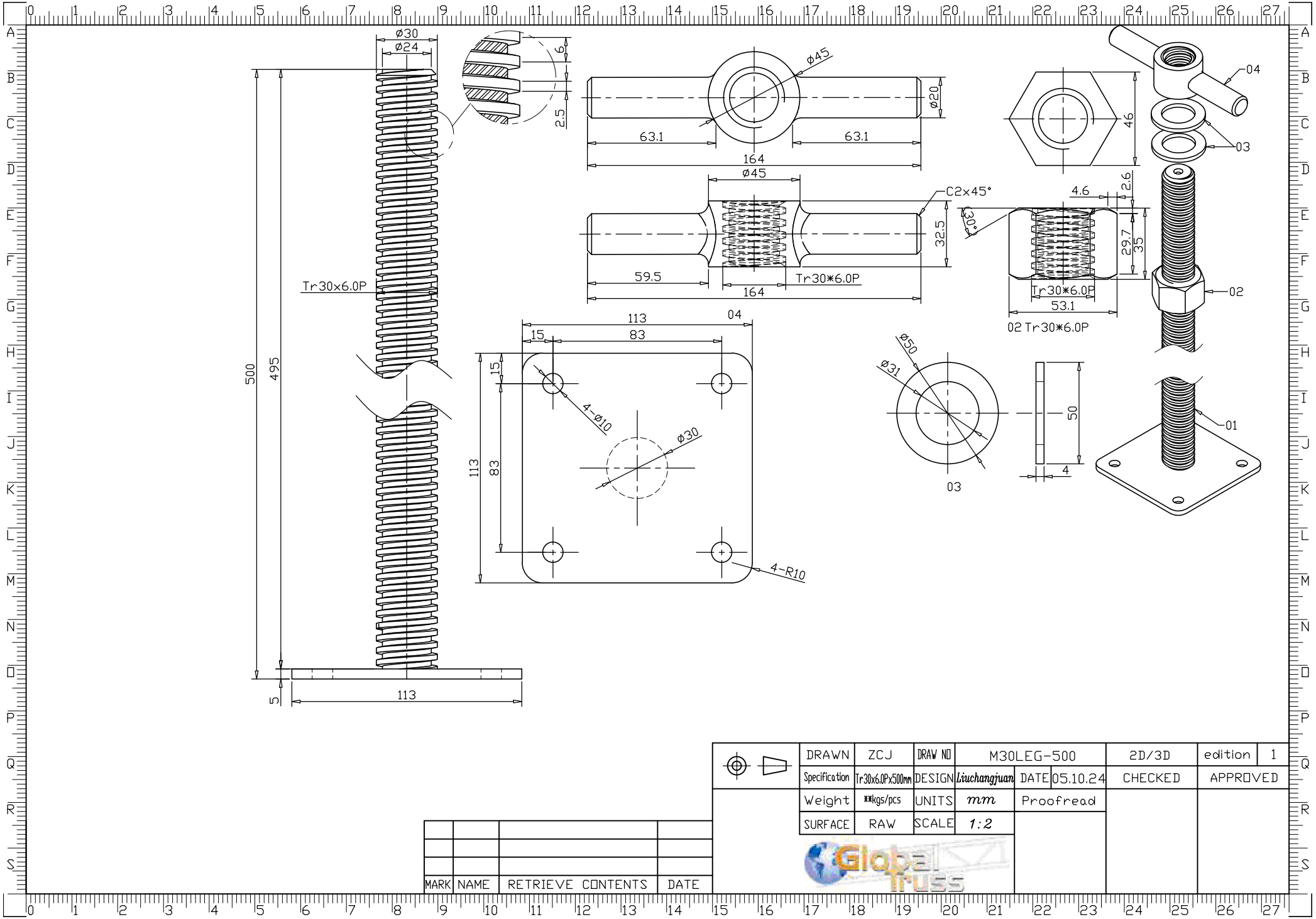

DRAWN	ZCJ	DRAW NO	M30LEG-500		2D/3D	edition	1
Specification	Tr30x6.0Px500mm	DESIGN	Liuchangjuan	DATE 05.10.24	CHECKED	APPROVED	
Weight	**kgs/pcs	UNITS	mm	Proofread			
SURFACE	RAW	SCALE	1:2				

MARK	NAME	RETRIEVE CONTENTS	DATE