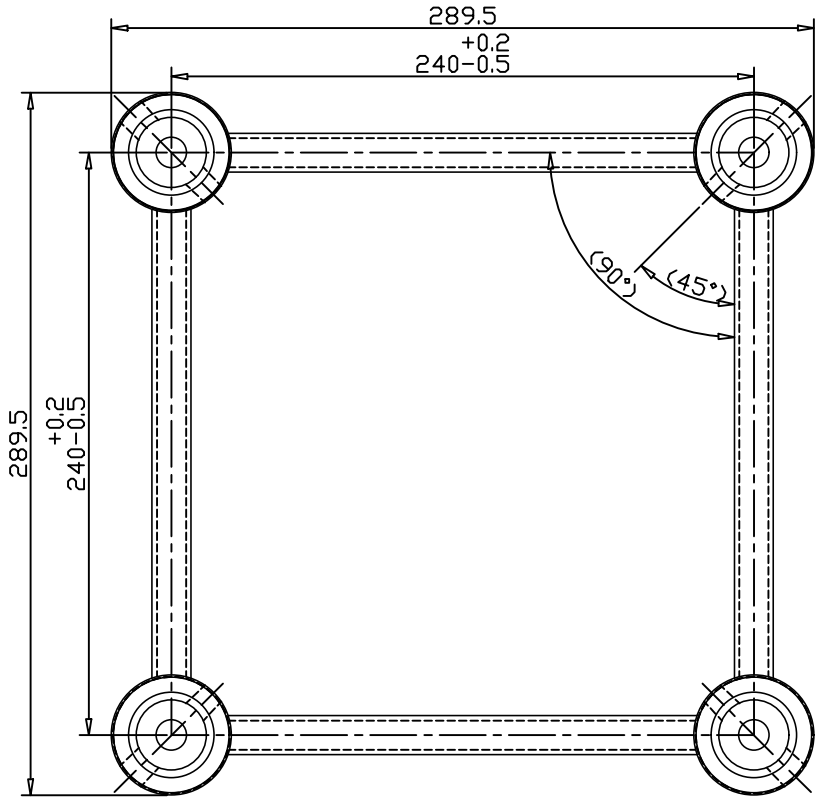

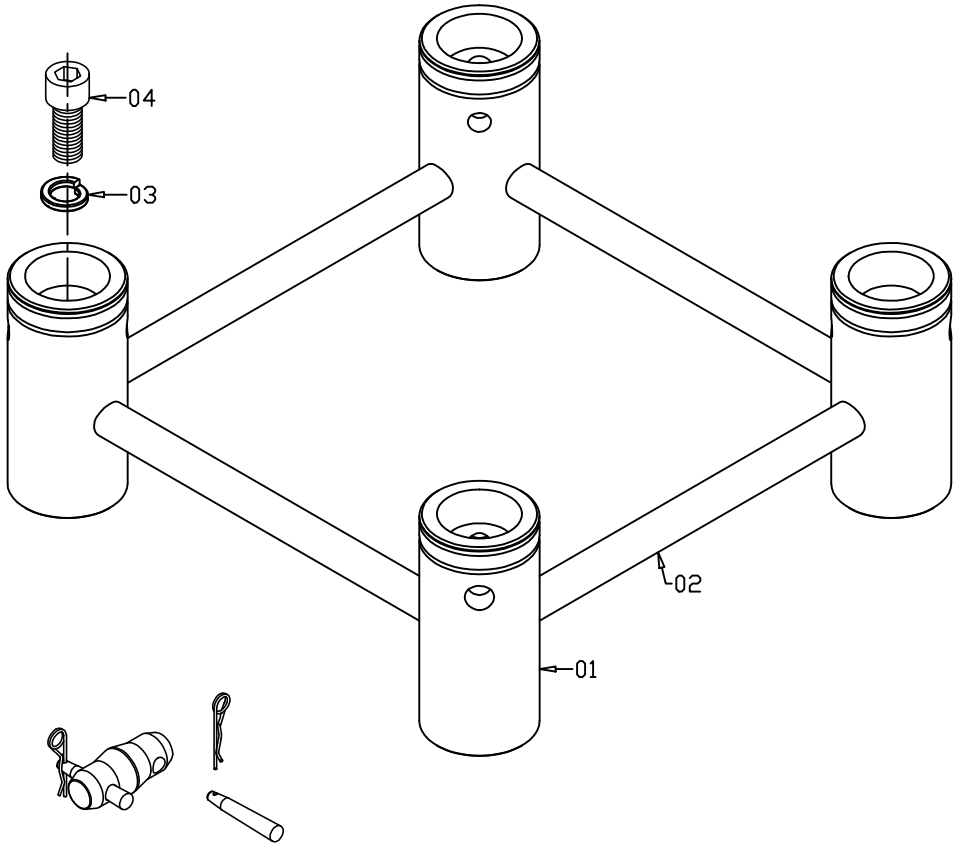

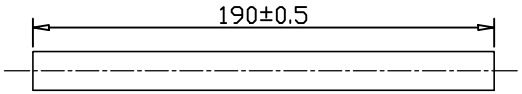

(02)

NO.	SPEC.	MATERIAL	FIN.	QTY.
fitting	DMS-01-1	Steel	ZP	8
	DMS-12-4A	S45C	ZP	8
	DMS-12-3	#2011	T6	4
04	M12*1.75P*30mm	Steel	Black	4
03	ø12.5*ø19*3.4t	Steel	ZP	4
02	ø16*2.0t*190mm	#6082	T6	4
01	ø49.5*105mm	#6082	T6	4

DRAWN		DRAW NO	QLJJ22A		2D/3D	edition	1
Specification	289.5*289.5*105mm	DESIGN	mm	DATE 21.11.16	CHECKED	APPROVED	
Weight	2.6kgs/pcs	UNITS	mm	Proofread			
SURFACE	RAW	SCALE	1:3				

MARK	NAME	RETRIEVE CONTENTS	DATE